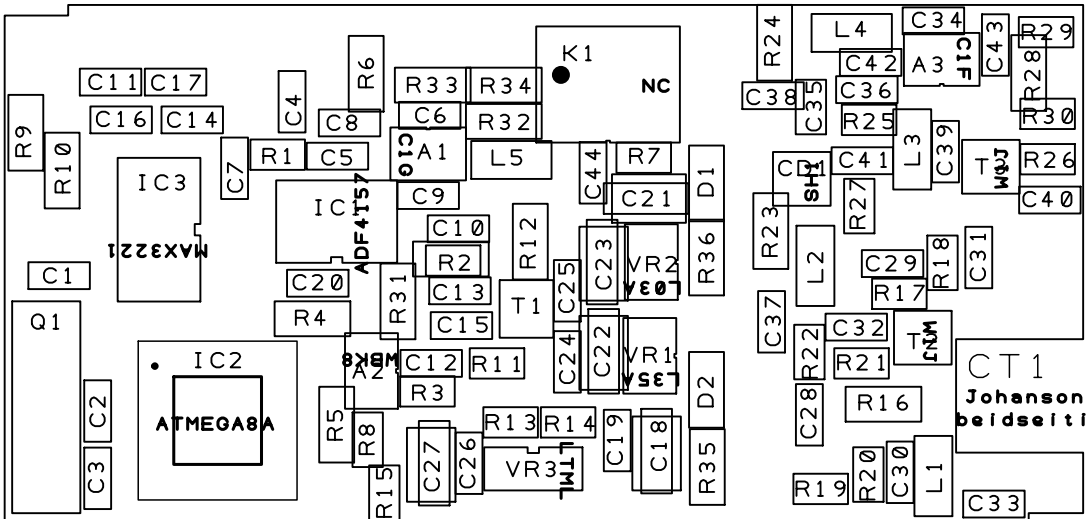
C11
C17
C16
C14
R9
R10
C4
R6
C8
R33
R34
C6
R32
K1
NC
C7
R1
C5
IC3
MAX3221
IC1
ADF4157
C10
A1
C9
L5
C44
R7
C21
D1
C1
C20
R4
C10
R2
C13
C15
R31
R12
T1
C25
C23
VR2
L03A
R36
Q1
IC2
ATMEGA8A
C2
C3
A2
MBK8
C12
R11
R3
C24
C22
VR1
L35A
D2
R5
R8
R15
C27
C26
R13
R14
VR3
L1ML
C19
C18
R35
R24
L4
C34
C42
A3
C1F
C43
R29
R28
C38
C35
C36
R25
R30
L3
C39
T
L1HS
C41
R26
R27
C40
R23
L2
C29
R18
C31
R17
C37
C32
T
L2MS
R22
R21
C28
R16
R19
R20
C30
L1
C33
CT1
Johanson 5200
beidseitig anlöten