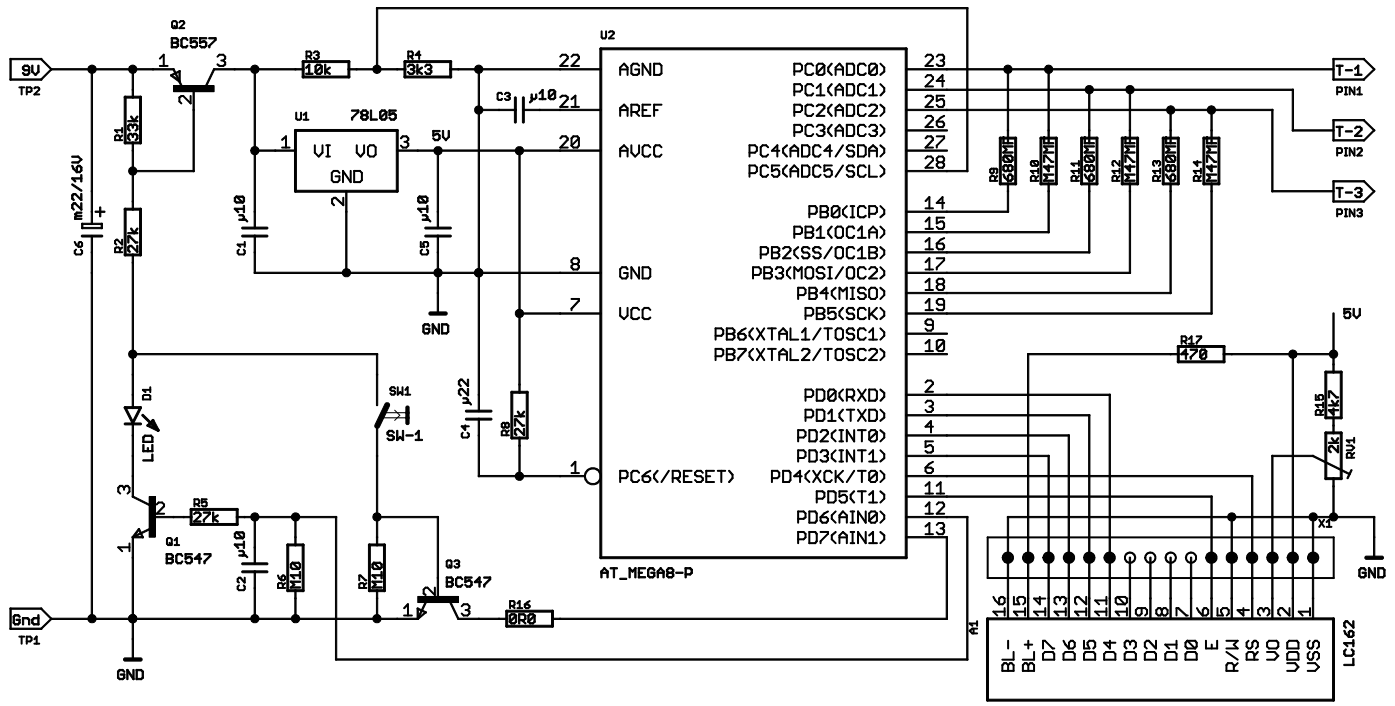

TRANSISTOR TESTER #5	FileName: trtest05
	06.05.2012 13:05:02
	Sheet: 1/1 Rev.: